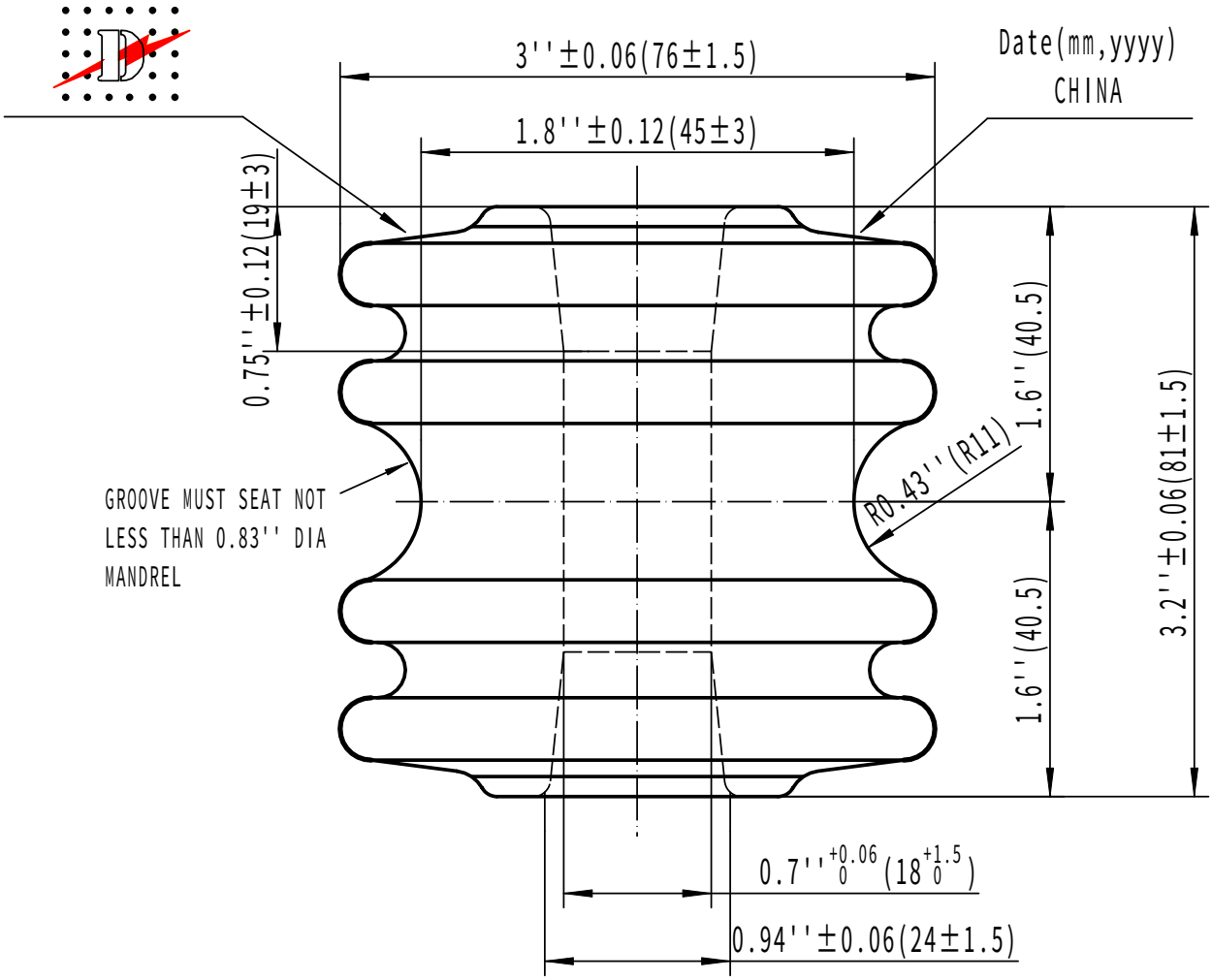

NOTE:

1.Transverse Strength	4000lbs(17.8kN)
2.Low Frequency Flashover (Dry)	25kV
3.Vertical Low Frequency Flashover (Wet)	12kV
4.Horizontal Low Frequency Flasover (Wet)	15kV
5.Applicable Standard ANSI C29.3-1986.	

General Tolerance			DP 53-3 SPOOL INSULATOR (ANSI 53-3)			
<30 mm	±1.5 mm	ANGLE:				
>30 mm	±5%					
Drawn	William	Dec.28,2005	DULHUNTY POWER	Mass	Scale	N/S
Checked				A4-6094	REV	A
Approved						